ENGLISH

GUNTAMATIC

Prize for Innovation 1999

Austrian and Upper Austrian 'Energy Genius' award 2002

Bavarian Prize for Innovation 2002

Energy Globe 2003

Environmental Award "Blue Angel"

Austrian and Upper Austrian Prize for Innovation 2005

French Prize for Innovation 2005

French Prize for Innovation 2009

Austrian and Upper Austrian Prize for Innovation 2010

4 - 5 BIOSTAR

6 - 7 POWERCORN/BIOCOM

8 - 9 POWERCHIP

10 - 11 SYNCHRO

12 - 13 TECHNICAL DETAILS BIOSTAR

14 - 15 TECHNICAL DETAILS POWERCORN/BIOCOM

16 - 17 TECHNICAL DETAILS POWERCHIP

18 TECHNICAL DETAILS SYNCHRO

19 TECHNICAL DETAILS AKKUTHERM/BOILER

1

BIOSTAR FLEX

LOW TEMPERATURE
PELLET SYSTEM
UP TO 23 KW

2

3

4

5

1 - BIOSTAR FLEX
Vacuum pellet supply

2 - Pellets - 100% wood

3 - Operating panel

4 - Ignition and drop shaft

5 - 'BOX': steel framed, textile Pelletsilo
with discharge unit and vacuum uptake
or 'FLEX' floor mounted auger
with vacuum uptake for built in pellet stores

Time to Live

Do you dream of a cosy warm house?
Do you want to heat with biomass but still want to enjoy the highest level of convenience at the same time? Does your heating system have to be value for money and function for decades without complaint? Then a **BIOSTAR** is what you have been looking for.

High Flex

The reliable and high quality vacuum pellet feed system of the **BIOSTAR** boilers provides flexibility of system layout as the boiler can be separated from the pellet store / silo by up to 25 meters. The specially developed cyclone pellet hopper on the boiler provides optimum dust separation and reduces service and cleaning intervals. The free moving rotary sluice valve and pellet drop shaft ensure 100% burn-back protection. Precision gear assemblies reduce electricity demand.
The **FLEX** auger system for built in pellet stores feeds fuel evenly and uniformly from the entire length of the pellet store. The **BOX** steel framed, textile silo also provides controlled fuel supply with ease of on site installation.

5

Superior Design

We have to admit that our new **BIOSTAR** is a real gem. From now on you can simply forget about having to worry about dealing with the heating. Our user-friendly technology takes care of it all.

- From 3 - 23 kW, infinitely variable bio-modular burning, providing the right amount of heat at the right time
- Fully automated from the wood to the ash, with automated self cleaning mechanism
- Patented: Low temperature combustion process without condensation
- All critical components specified with 200% safety margin
- Menu guided operation - simple, safe and easy to use
- O_2 guided process monitoring

1

POWERCORN/BIOCOM FLEX

ENERGY GRAINS / PELLETS
HEATING SYSTEM WITH VACUUM FEED
30 - 50 KW

2

POWERCORN/BIOCOM FLEX

ENERGY GRAINS / PELLETS
HEATING SYSTEM WITH VACUUM FEED
75 - 100 KW

3

4

5

6

7

1 - POWERCORN/BIOCOM 30 - 50 KW
2 - POWERCORN/BIOCOM 75 - 100 KW
3 - Energy Grains, Wood Pellets
4 - Burning chamber with step grate
5 - Reaction pipe and heat exchanger
6 - Menu-guided control panel
7 - Ash container - automatic discharge of ash

Perfect Burning

The hot air blower ignites quickly and efficiently by means of a sophisticated control program. Energy Grains or Pellets are burned at an ideal firebed temperature of approx. 650°C, so that cinders are prevented. A self-cleaning step grate provides the necessary movement needed in the firebed and also transports the ash. Any combustible gases that are present are converted cleanly into energy in a large burn-out zone with the aid of secondary air supply.

Reaction Tube and Heat Exchanger

The dust is separated in a specially developed reaction tube. Aggressive substances condense on the double-layered stainless steel surface, where they can cause no damage. The connecting pipe bundle heat exchanger is constantly cleaned by a moving spiral mechanism and makes use of every degree of temperature.

Simple and Efficient

The menu-guided control panel of the heating system, monitors the entire burning process by means of lambda probes and temperature sensors, to continually adjust the boiler output to the maximum possible efficiency. The ability to regulate temperature means that heat can be ideally distributed and a cosy room can be achieved with the highest degree of heating comfort and efficiency.

Highest levels of convenience when cleaning

A slow-moving auger spreads the ashes which are sifted through the grate into a 60 litre, movable ash container. The dust removed in the automated cleaning of the heat exchanger is also continually discharged into a seperate easy to empty 12-litre container.

1

POWERCHIP

WOODCHIPS | ENERGY GRAINS |
PELLETS | MISCANTHUS HEATING SYSTEM
UP TO 50 KW

2

POWERCHIP

WOODCHIPS | ENERGY GRAINS |
PELLETS | MISCANTHUS HEATING SYSTEM
75 + 100 KW

3

4

5

6

7

1 - POWERCHIP up to 50 kW

2 - POWERCHIP 75 + 100 kW

3 - Wood Chips (Energy Grains, Pellets, Miscanthus)

4 - Firebed

5 - Robust spring arm agitator

6 - Energy-saving drive technology

7 - Conveyor technology

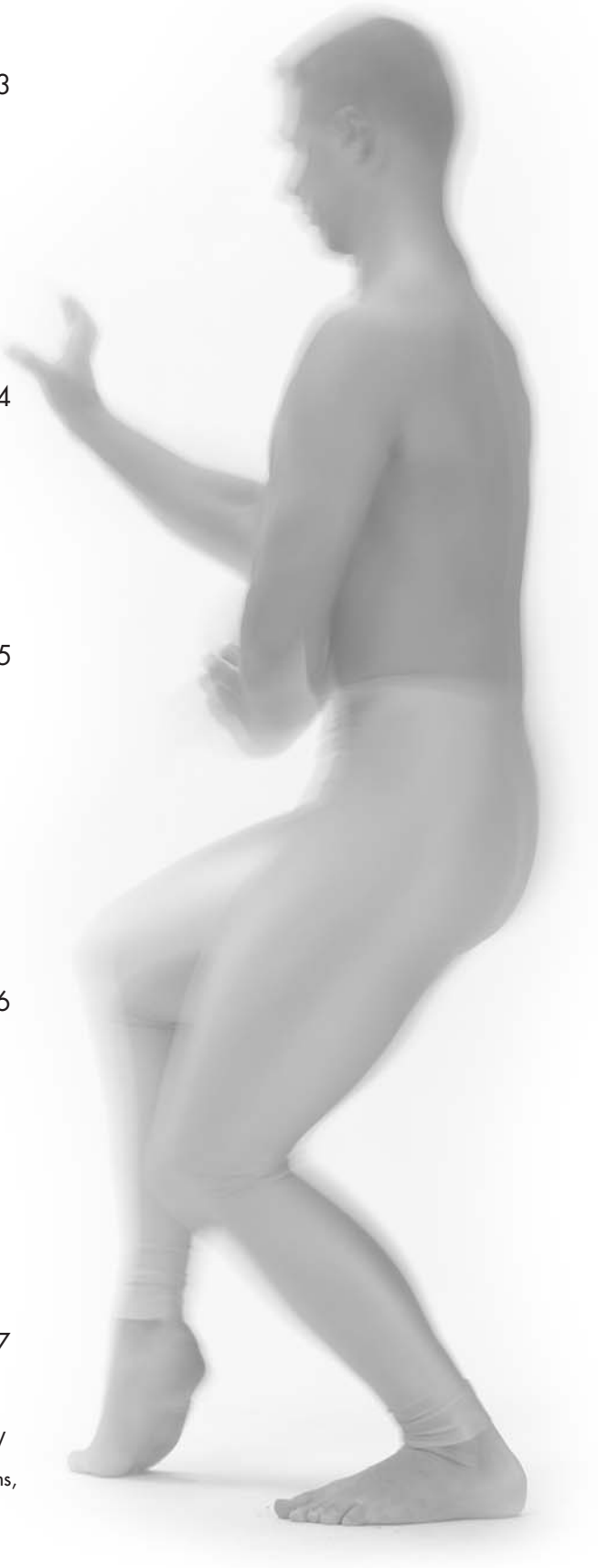

Fuel Supply from the Store Room

The extremely robust auger used for the discharge from the store room, with its spring arm agitator, gently transports the Wood Chips, Pellets, Miscanthus or Energy Grains while using the lowest amount of energy possible. Durable gears and motors provide the highest level of operational safety. The unique modular construction enables easy transport and assembly of the installation.

The Stoker Unit

From the discharge auger, protected by means of a safety cover, Wood Chips, Pellets, Miscanthus or Energy Grains fall through a Burn-back-proof drop level into the stoker auger. A sophisticated lambda sensor constantly monitores that the optimum amount of fuel is delivered. Additional operational safety is ensured by a fill level indicator.

Highest Level of Safety

The built-in extractor-draft fan does not only ensure that the exact amount of air is used, it also provides constant suction in the burning chamber, which in conjunction with the drop level and fire damper guarantee absolute prevention from burn-back.
The built-in error diagnosis system with the added possiblity of monitoring via a mobile phone provides the highest level of operational safety.

1

SYNCHRO

WOOD CARBURETTOR
50 CM SPLIT LOGS
AND CHOPPED WOOD

2

3

4

5

1 - SYNCHRO

2 - Split logs and chopped wood

3 - Menu-guided operation

4 - Combustion chamber/ heat exchanger

5 - Grate and ash collector tray

The Specialist

In our forests, a cycle has been taking place for millions of years.
CO_2 is converted into THE fuel of the past, the present and the future - LOGS.
For Logs - and only for Logs - the perfect fuel burning unit is now available, the **SYNCHRO**.

A PhD in Engineering

The most modern wood combustion technology, a highly efficient heat exchanger, a huge filling chamber, reliable electronics, are all ingredients for a concept that has been proven a thousand times over, a concept for insiders - **SYNCHRO**.

Clear Ratios

Wood gases present in a hot fire-bed, mixed with pre-heated air, burn at a high temperature and the resulting heat is used to heat water. The task was difficult but the solution is simple:

- Heating chamber can be filled with 170 litres from above
- Long operational life due to enclosed bodywork
- Easy to clean: Cast grate and compartment for ash
- Powerful pre-heating of combustion air
- Robust combustion chamber
- Large tubular heat exchanger
- Low level flue output for flexibility of installation
- Log length up to 50 cm
- Easy operation: Guided menu options
- Pumps and fans monitored by rotational speed
- Buffer storage and display indicating when more fuel is needed
- Synchronised, emission-guided control
- Level of combustion as high as 94%
- Only 70 cm door entry width required

BIOSTAR
FLEX-SUCTION DISCHARGE

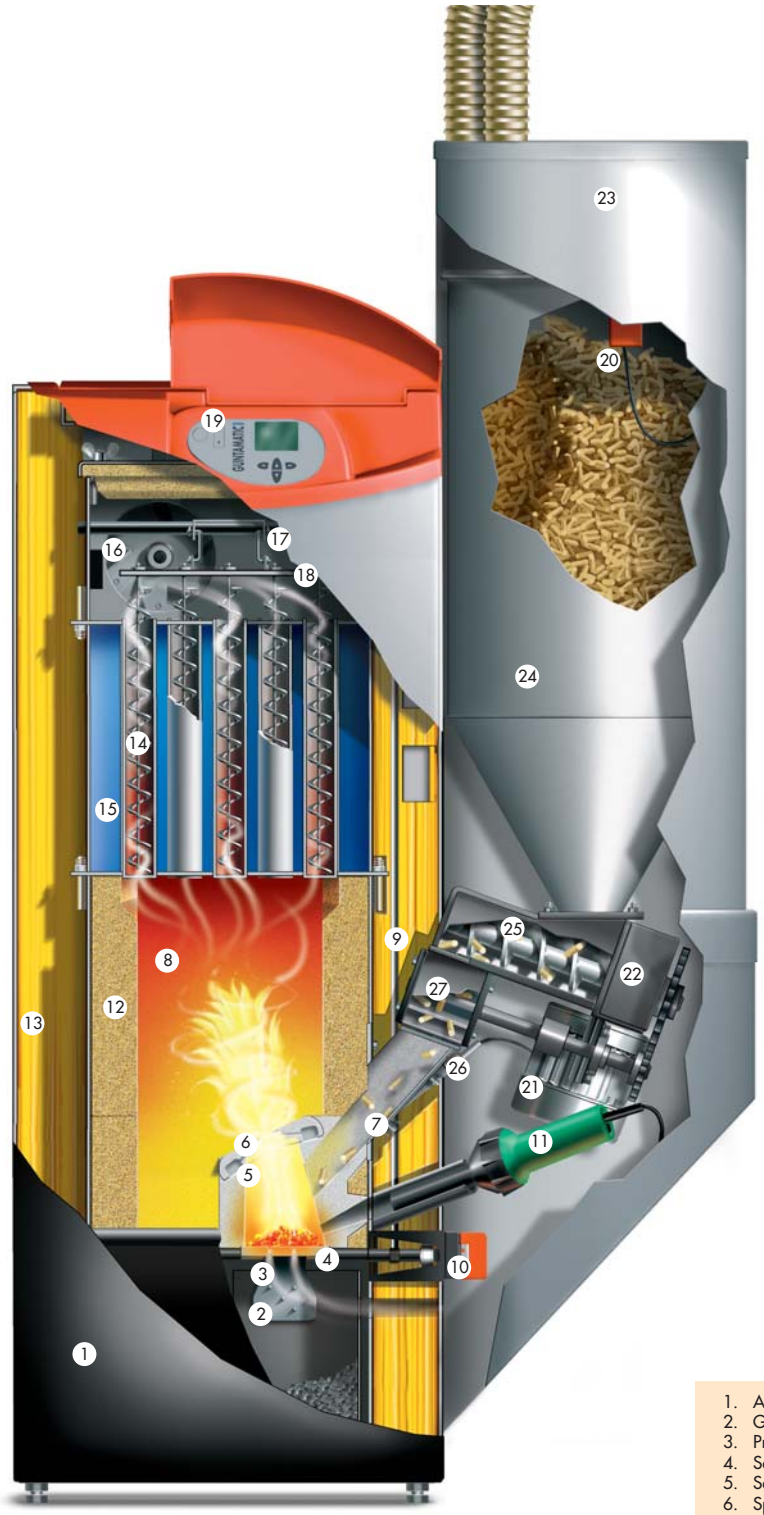

1. Ash door
2. Grate cleaning plate
3. Primary air
4. Self-cleaning grate
5. Secondary air
6. Spiral jet
7. Backburn-proof drop shaft
8. Air release zone
9. Automatic cleaning of the heat exchanger
10. Cleaning motor
11. Ignition blower
12. Ceramic insulation
13. Full insulation
14. Cleaning Spiral
15. Tubular heat exchanger
16. Extraction draught fan
17. Flue gas sensor
18. Lambda probe
19. Control with user friendly operation panel
20. Sensor to indicate fill level
21. Motor
22. Drive
23. Suction fan
24. Hopper tank
25. Conveyor auger for Pellets
26. Monitoring sensor
27. Rotary sluice valve

Bio-modular Combustion

The entire boiler system (Extraction draught fan, pellet feeder auger, rotary sluice valve, hot water circulating pump) is constantly and softly regulated to produce a wide range of variable output depending on energy needs. Uneconomical cold starts are kept to an absolute minimum.

Heat Exchanger

Tubular heat exchanger operating using countercurrent method with variable performance. The higher the speed of the combustion gases, the greater the effect of the heat exchanger. No build up of condensation even into the lower temperature range thanks to the patented injection system.

Vacuum Pellet Supply

Internal turbine systems allows boiler and pellet store be placed apart providing the highest degree of installation flexability. Rotaty sluice valve positioned behind feed auger meens there is no cutting of the Pellets and provides 100% burn-back safety.

VACUUM PELLET SUPPLY SYSTEM

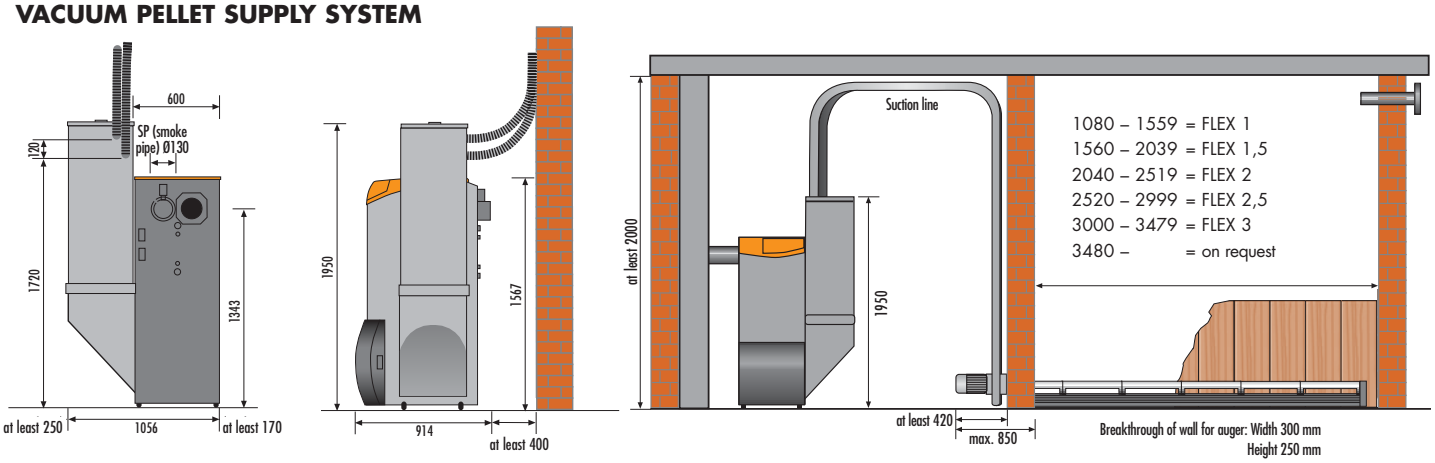

- Vacuum container on boiler: approx. 100 litres, 210 kWh
- Suction line: max. 20 m (25 m) (1st floor: max. 15 m)
- Refill period: approx. 8 - 10 min.
- Weight per metre of auger used to transport Pellets from store room: approx. 40 kg

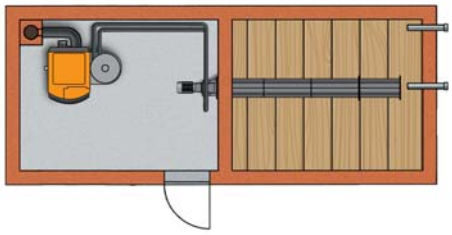

The vacuum system moves the fuel from the uptake point on the auger unit and transports it to the hopper on the boiler.

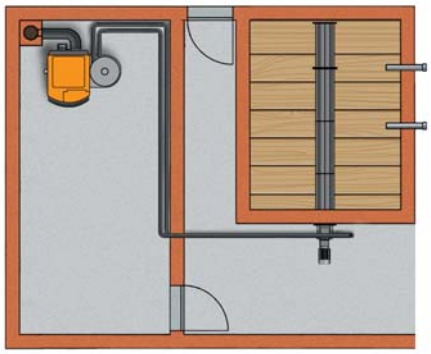

The store room does not have to be situated directly beside the boiler room. This "air bridge" can be used for distances with a tube length of up to 20 m.

BIOSTAR BOX

Box	7,5	8,3	11	14	
Width	2,1	2,9	2,5	2,9	m
Depth	2,1	1,7	2,5	2,9	m
Height	1,8-2,5	1,9-2,5	1,8-2,5	1,9-2,5	m
Tank capacity	5,0-7,5	6,1-8,3	8,3-11,0	10,2-14,1	m³

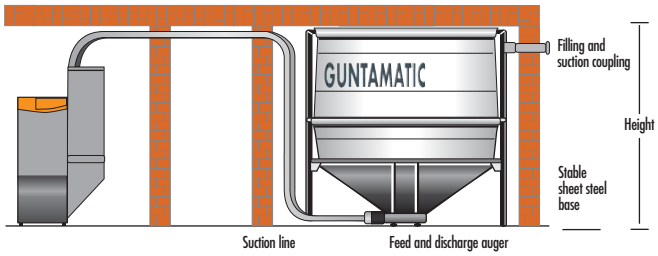

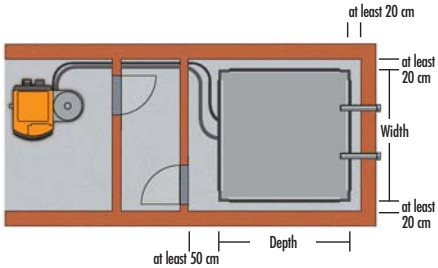

TYPE Technical Data	12	15	23	12 W	15 W (One Week Store)	
Rated output	12	15	23	12	15	kW
Minimum output	3,3	3,5	6,9	3,3	3,5	kW
Draught requirement	0,1	0,1	0,15	0,1	0,1	mbar
Boiler temperature	38 – 80	38 – 80	38 – 80	38 – 80	38 – 80	°C
Boiler weight	298	300	305	268	270	kg
One Week Store capacity/weight				140	140	kg
Minimum flow rate	600	600	600	600	600	l/h
Water resistance (at 10 K)	11,7	17,2	37,7	11,7	17,2	mbar
CO emission NL	46	31	29	46	31	Mg/MJ
Storage unit capacity				400	400	Litres
Run time with one fill				7 - 21	6 - 21	Days / at 14 h
Cleaning of heat exchanger	Automatic	Automatic	Automatic			
Ash discharge	Automatic	Automatic	Automatic			
Degree of effectiveness of firing	– 94,7	– 94,8	– 94,7			%

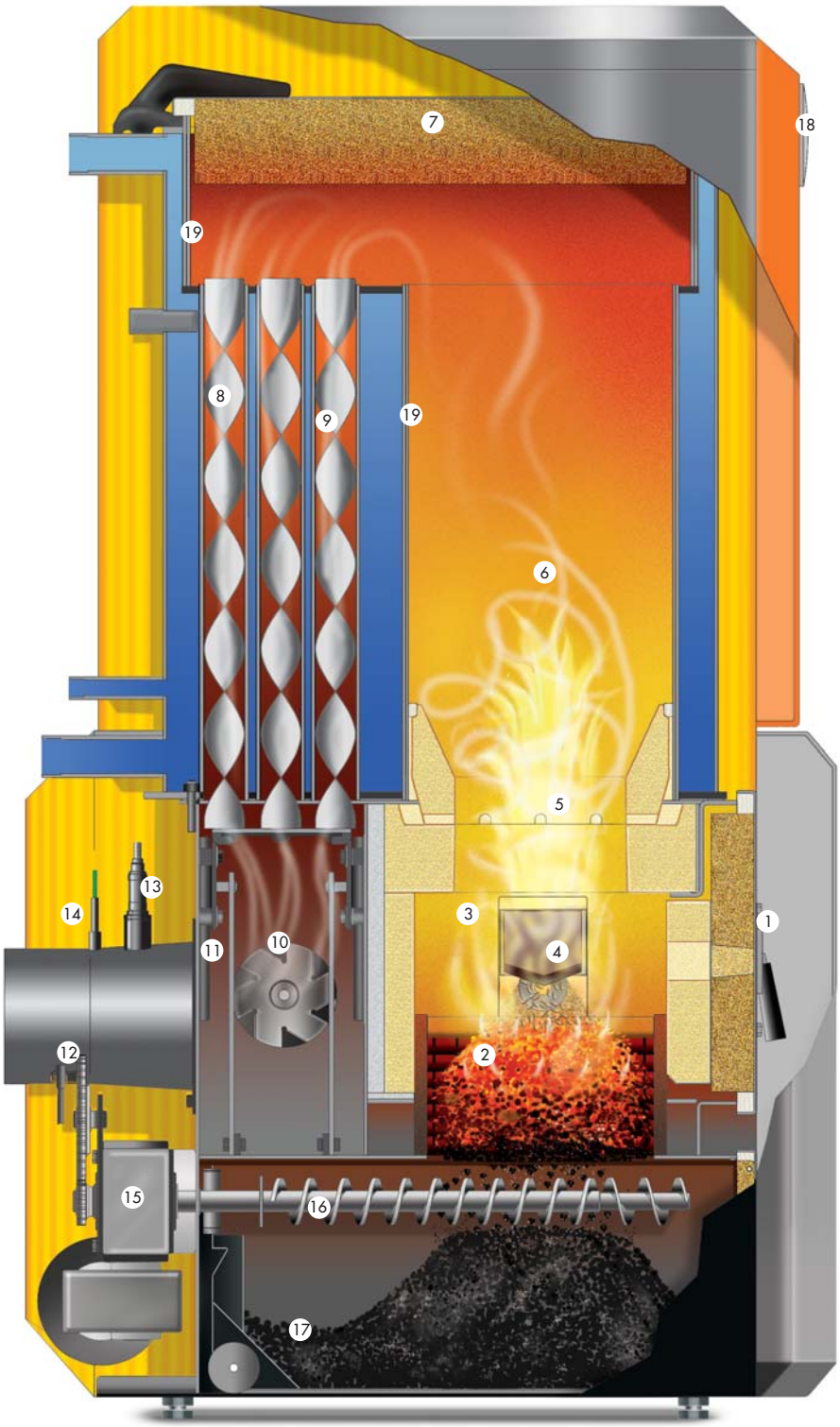

1. Furnace doors
2. Step grate - primary air
3. Combustion chamber
4. Fill level indicator
5. Spiral jet - secondary air
6. Reaction pipe
7. Cleaning cover
8. Vibrating mechanism
9. Tube bundle heat exchanger
10. Induced draught fan
11. Cleaning of heat exchanger
12. Smoke pipe
13. Lambda probe
14. Flue gas sensor
15. Cleaning/ grate drive
16. Ash auger
17. Removable ash container
18. Menu-guided control
19. Stainless liner for Energy Grains/ Miscantus only on Powercorn model
20. Ash removal vacuum
21. 200 l ash collection cylinder
22. Special vacuum tube
23. Rockwool fire proof liner
24. Fire protection ring

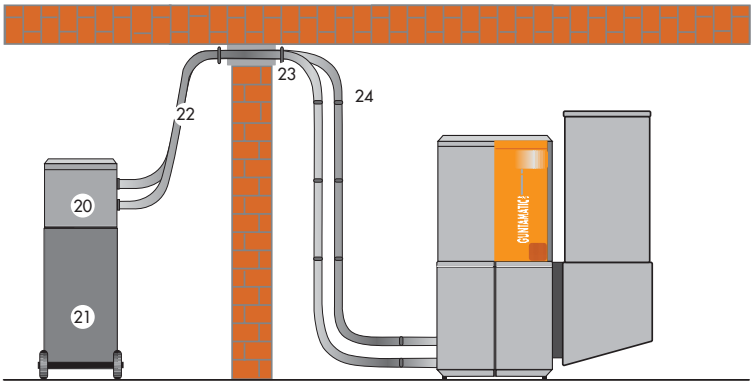

VACUUM FEED SYSTEM

BIOCOM/POWERCORN 30-50

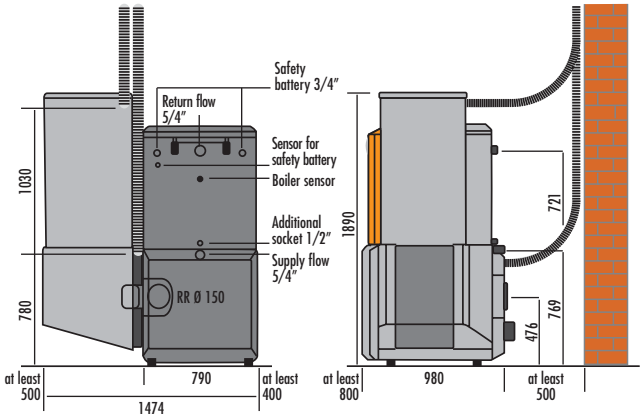

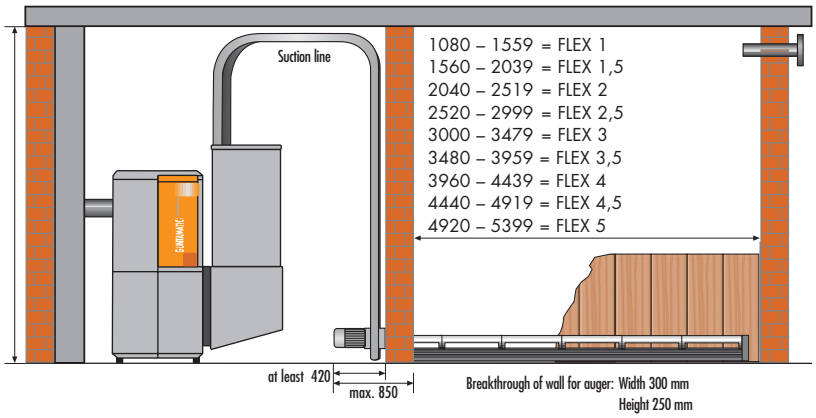

BIOCOM/POWERCORN 75-100

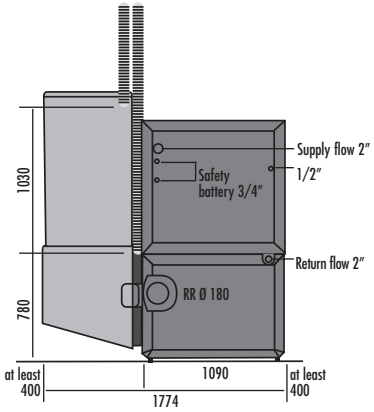

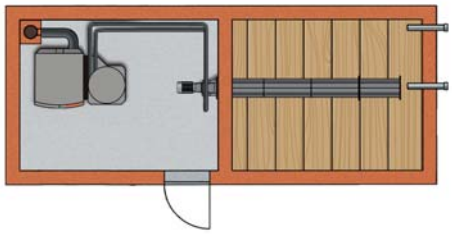

The vacuum system moves the fuel from the uptake point on the auger unit and transports it to the hopper on the boiler.

- Vacuum container on boiler: approx. 200 litres
- Suction line: max. 20 m
  (1st floor: max. 15 m)

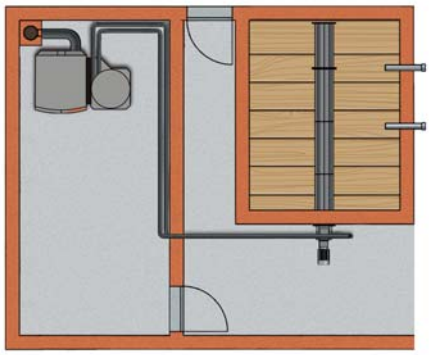

The store room does not have to be situated directly beside the boiler room. This "air bridge" can be used for distances with a tube length of up to 20 m.

SYSTEME BOX

Box	7,5	8,3	11	14	
Largeur	2,1	2,9	2,5	2,9	m
profondeur	2,1	1,7	2,5	2,9	m
Hauteur	1,8-2,5	1,9-2,5	1,8-2,5	1,9-2,5	m
Capacité du réservoir	5,0-7,5	6,1-8,3	8,3-11,0	10,2-14,1	m³

Granulés = 650 kg/m³
Grains énergétiques = 750 kg/m³

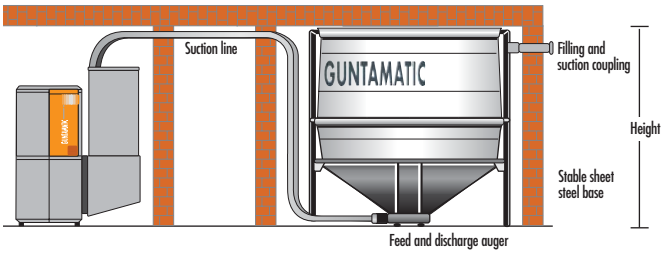

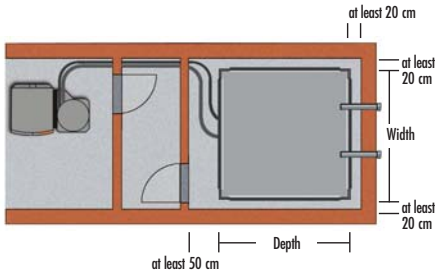

TYPE	BIOCOM Flex 30	40	50	75	100	POWERCORN FLEX 7-30	12-50	22-75	
Fuel	Wood Pellets 6 mm ÖNORM M7135					Wood Pellets 6 mm ÖNORM M7135 Energy Grains ÖNORM M7139			
Boiler performance Wood Pellets Energy Grains	7 - 30	9 - 40	12 - 50	22 - 75	22 - 100	7 - 30 7 - 25	12 - 50 12 - 40	22 - 75 21 - 70 (With additive)	kW kW
Required draught Boiler temperature Return flow temperature Elevation of return flow	0,15 50 - 80 >40 Pump (RA60 when buffered)	0,15 50 - 80 >40	0,15 50 - 80 >40	0,15 60 - 80 >45	0,15 60 - 80 >45	0,15 70 - 80 >55 Pump (RA60 when buffered)	Pump (RA60 when buffered)		mbar °C °C
Water content Operating pressure	128 max. 3	128 max. 3	147 max. 3	256 max. 3	256 max. 3	128 max. 3	147 max. 3	256 max. 3	Litres bar
Ash storage volume - "grate" Ash storage volume - "heat exchanger"	60 12	60 12	60 12	80 12	80 12	60 12	80 12	80 12	Litres Litres
Width of installation Smoke pipe diameter	1474 150	1474 150	1474 150	1774 180	1774 180	1474 150	1774 180	1774 180	mm mm
Total weight (without stoker unit) Weight bottom box Weight heat exchanger Weight stoker unit Weight drive unit Weight /m discharge auger	550 340 180 70 26 40	553 340 183 70 26 40	585 340 215 70 26 40	865 430 405 70 26 40	865 430 405 70 26 40	562 340 192 70 26 40	667 410 227 70 26 40	890 430 405 70 26 40	kg kg kg kg kg kg
Safety heat exchanger	yes	yes	yes	yes	yes	yes	yes	yes	
Power connection	230 V / 16 A					230 V / 16 A			

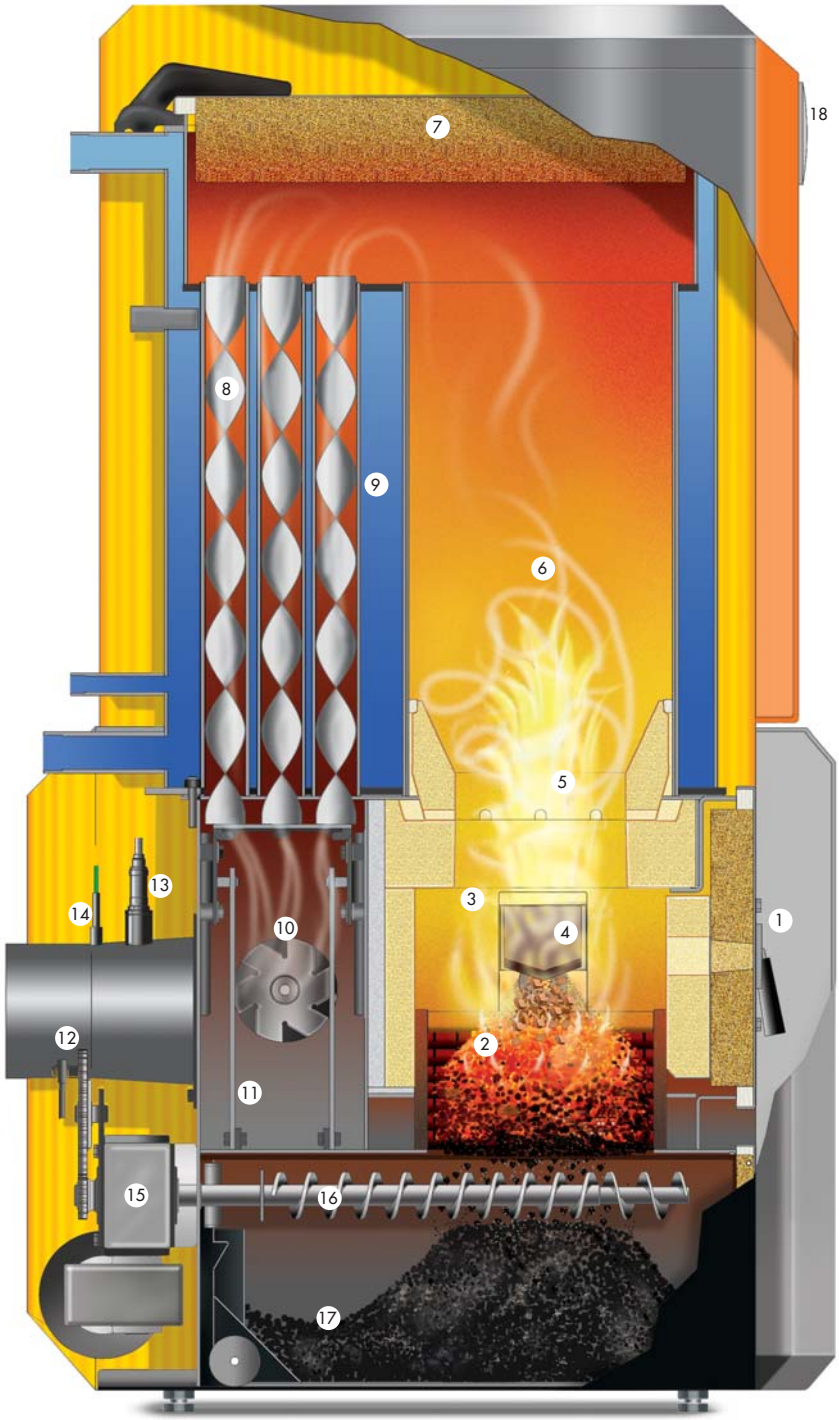

1. Furnace doors
2. Step grate - primary air
3. Combustion chamber
4. Fill level indicator
5. Spiral jet - secondary air
6. Reaction pipe
7. Cleaning cover
8. Vibrating mechanism
9. Tube bundle heat exchanger
10. Induced draught fan
11. Cleaning of heat exchanger
12. Smoke pipe
13. Lambda probe
14. Flue gas sensor
15. Cleaning/ grate drive
16. Ash auger
17. Removable ash container
18. Menu-guided control
19. Burn-back safety trap
20. Stoker unit
21. Wall entry point
22. Storage room safety temperature sensor
23. Auger system

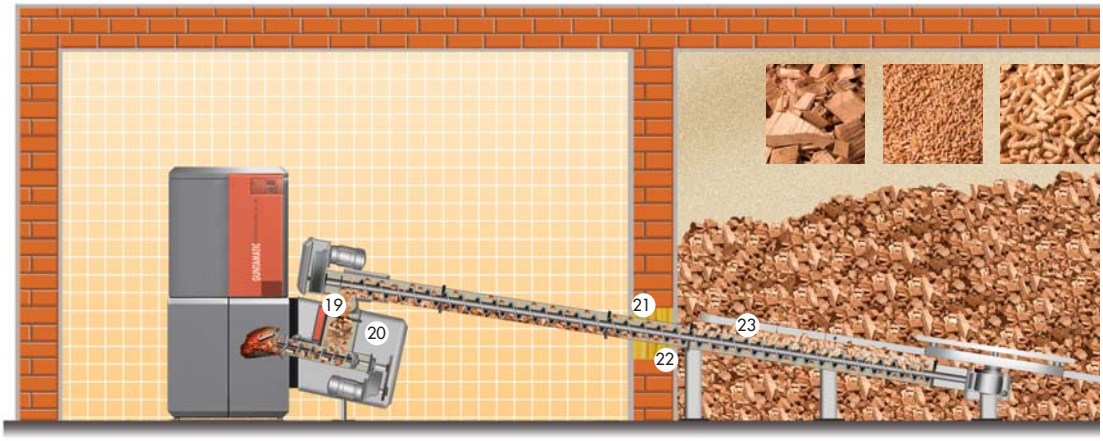

POWERCHIP
UP TO 50 kW

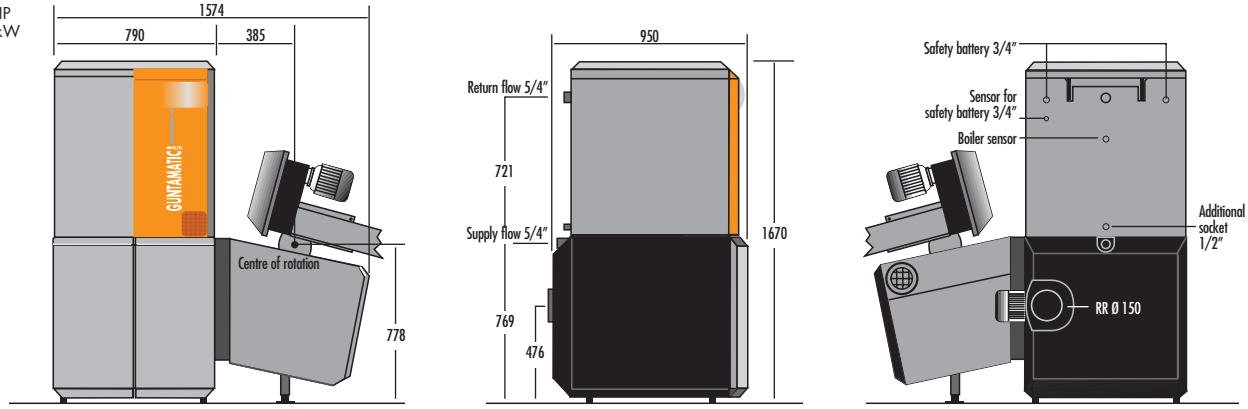

POWERCHIP
75 + 100 kW

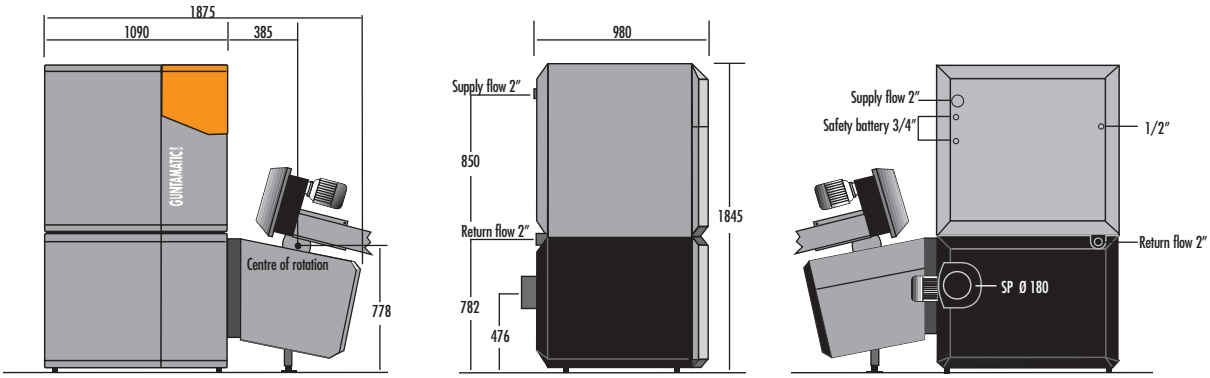

TYPE	POWERCHIP 20/30	POWERCHIP 40/50	POWERCHIP 75	POWERCHIP 100	
Fuel	Chopped wood G 30				ÖNORM M7133
	Wood Pellets 6mm				ÖNORM M7135
	Energy Grains (with additional equipment)				ÖNORM M7139
Boiler performance	Chopped wood 7 - 30 Wood Pellets 7 - 30 Energy Grains 7 - 25	Chopped wood 12 - 50 Wood Pellets 12 - 50 Energy Grains 12 - 25	Chopped wood 22 - 75 Wood Pellets 22 - 75 Energy Grains 21 - 70 (With additive)	Chopped wood 22 - 100 Wood Pellets 22 - 100	kW kW kW
Required draught Boiler temperature Return flow temperature Elevation of return flow	0,15 60 - 80 (70-Grain) >40 (55-Grain) Pump (RA60 when buffered)	0,15 60 - 80 (70-Grain) >40 (55-Grain) Pump (RA60 when buffered)	0,15 60 - 80 (70 - 80-Grain) >40 (55-Grain) Pump (Return temperature boost when buffered)	0,2 60 - 80 (70 - 80-Grain) >40 (55-Grain)	mbar °C °C
Water content Operating pressure	128 max. 3	147 max. 3	256 max. 3	256 max. 3	Litres bar
Ash storage volume - "grate" Ash storage volume - "heat exchanger"	60 12	60 12	80 12	80 12	Litres Litres
Width of installation Smoke pipe	1574 150	1574 150	1875 180	1875 180	mm mm
Total weight (without stoker unit) Weight bottom box Weight heat exchanger Weight stoker unit	550 340 180 75	585 340 215 75	865 430 405 75	865 430 405 75	kg kg kg kg
Safety heat exchanger	yes	yes	yes	yes	
Power connection	400 V / 16 A	400 V / 16 A	400 V / 16 A	400 V / 16 A	

DISCHARGE FROM STORAGE ROOM

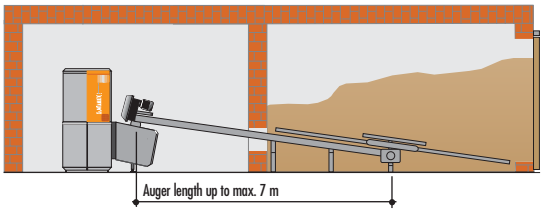

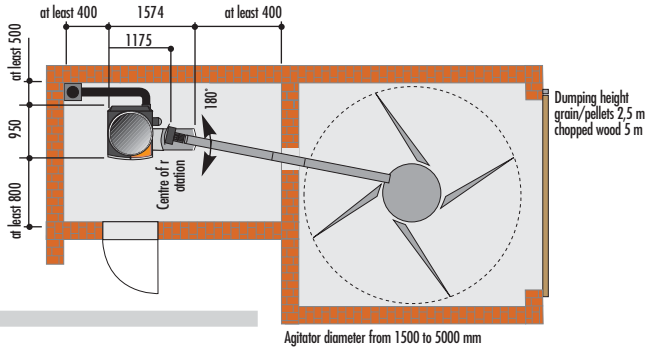

STORE ROOM POSSIBILITIES

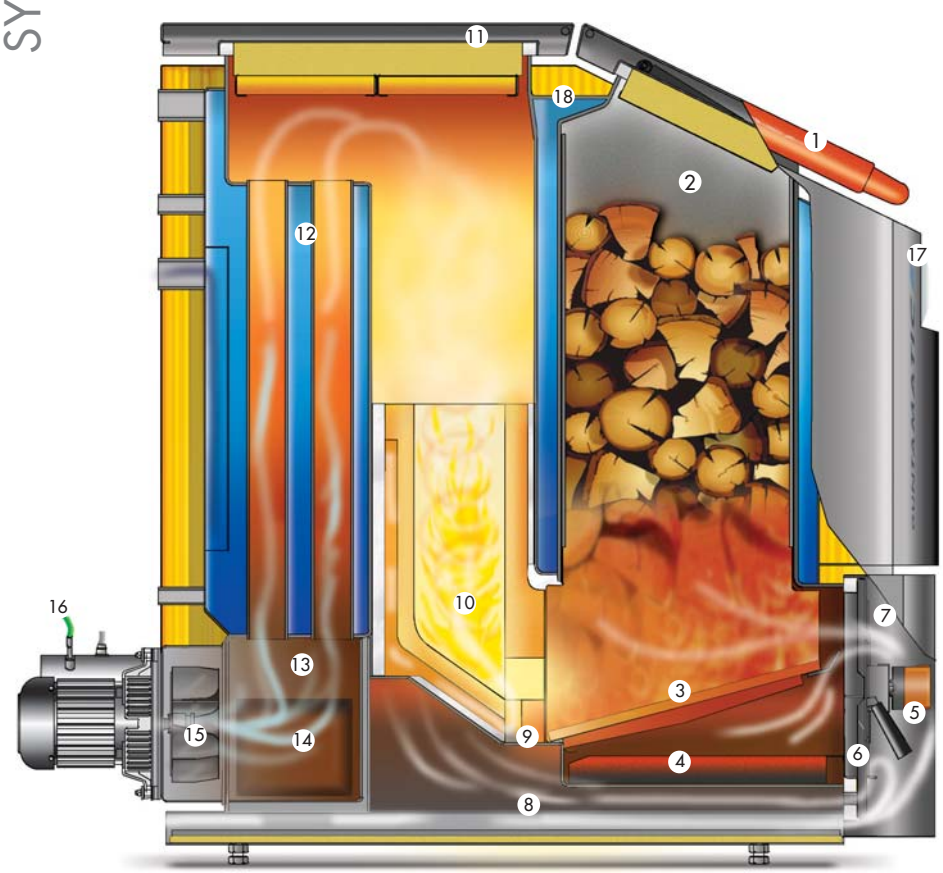

Wood Carburettor Technology:

The firewood is degassed in the lower area of the filling chamber (embers zone). The resulting distillation gas is then burnt in a turbo combustion chamber positioned to the side. The remaining solid matter can be oxidized out unhindered as embers.
The ash can also easily be removed during operation using the ash storage compartment.

Rotational Combustion:

Through the interaction of centrifugal force, gravity and flow resistance, a vortex is created in the combustion chamber from which the gases can only leave after they have been completely oxidized.

1. Top filling cover with suction canal
2. Filling chamber with protective lining
3. Hot cast grate
4. Ash storage compartment
5. Primary and secondary air motor
6. Secondary air
7. Primary air
8. Pre-heating of ground air
9. Secondary air blast pipe
10. High temperature combustion chamber
11. Cleaning cover
12. Tubular heat exchanger
13. Dust removal zone
14. Cleaning opening
15. Induced draught fan
16. Flue gas sensor
17. Microprocessor control with menu-guided operation
18. Transportation hooks

TYPE	SYNCHRO 31/34	SYNCHRO 44	
Heating performance	31/34 26,6/29	44 38	kW Mcal/h
Boiler: Width measurement D Height measurement E Depth measurement F	745 1300 1195	745 1300 1195	mm mm mm
Fuel volume Filling chamber width Depth of combustion chamber	170 535 340	170 535 340	Litres mm mm
Water content Operating pressure max.	125 3	125 3	Litres bar
Transportation weight approx.	650	660	kg
Supply and return flow Measurement A Measurement B	R1 1/4 1165 905	R1 1/4 1165 905	inch mm mm
Smoke pipe connection measurement C Smoke pipe diameter	215 150	215 150	mm mm
Induced draught ventilator Draught necessary	0,12 20	0,12 20	kWh PA
Boiler size without isolation Width Height Depth	695 1290 1140	695 1290 1140	mm mm mm
Flange (alternative) Inner diameter G Height H	110 880	110 880	mm mm

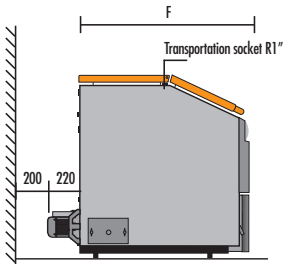

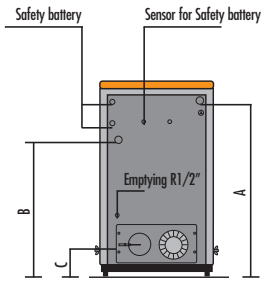

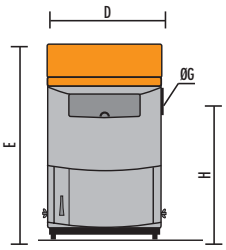

Picture: Design PS/PSB (Design ECO/ECOB without front cover)

Picture: Design boiler ECO

FRESHWATER SYSTEM TANK PSF

TYPE	Volume (total litres)	d Ø without isolation (mm)	D Ø with isolation (mm)	h height without isolation (mm)	H height with isolation (mm)	KR Tilting radius without isol. (mm)	F/R Flow and return tappings	Temp. Sensor tapping	Litres hot water	Flow rate (l/min)	COLD/DHW Connection for cold supply and DHW output	Secondary return tapping
600	600	750	994	1655	1745	1720	5/4″	1/2″	250	30	1″	1/2″
850	826	790	1000	1800	1900	1890	5/4″	1/2″	250	30	1″	1/2″
1000	1000	790	1000	2200	2300	2250	5/4″	1/2″	250	30	1″	1/2″
1100	1069	900	1110	1800	1900	1900	5/4″	1/2″	350	30	1″	1/2″
1400	1370	900	1110	2300	2400	2370	5/4″	1/2″	350	30	1″	1/2″
1600	1572	1100	1310	1800	1900	1970	5/4″	1/2″	350	30	1″	1/2″
2000	2000	1100	1310	2300	2400	2400	5/4″	1/2″	350	30	1″	1/2″

Flange for solar coil at bottom / middle available on request

AKKUTHERM PS / ECO BUFFER STORAGE

TYPE	Volume (total litres)	d Ø without isolation (mm)	D Ø with isolation (mm)	h height without isolation (mm)	H height with insolation (mm)	KR Tilting radius without isolation (mm)	V/R Supply and return flow sockets	T Sensor sockets
850	826	790	1000	1800	1900	1890	5/4″	1/2″
1000	1000	790	1000	2200	2300	2250	5/4″	1/2″
1100	1069	900	1110	1800	1900	1900	5/4″	1/2″
1400	1370	900	1110	2300	2400	2370	5/4″	1/2″
1600	1572	1100	1310	1800	1900	1970	5/4″	1/2″
2000	2000	1100	1310	2300	2400	2400	5/4″	1/2″
2000/2	2000	1100	1310	2300	2400	2400	each 2x2″	1/2″

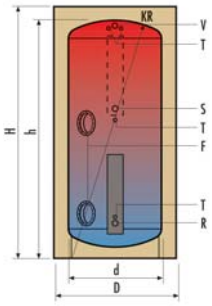

ECO DOMESTIC HOT WATER STORAGE

BOILER TYPE	Volume (total litres)	d Ø without isolation (mm)	D Ø with isolation (mm)	H height with isolation (mm)	Number of bare-tube heat exchangers	HV/HR Heating supply and return feed	T Sensor sockets	Mg Anode	AHeating surfaces of the heat exchangers (m^2)	Cold (KW) and warm water (WW) connections	F Flange
ECO 305	300	–	605	1795	1	1″	1/2″	5/4″	1,4	1″	8 hole
ECO 505	500	–	755	1840	1	1″	1/2″	5/4″	2	1″	8 hole
ECO 505 Solar	500	–	755	1840	2	1″	1/2″	5/4″	2 + 1	1″	8 hole

For boiler ECO: EH = 6/4″ Socket for electric screw-in heating, Z = Circulation connection 1″

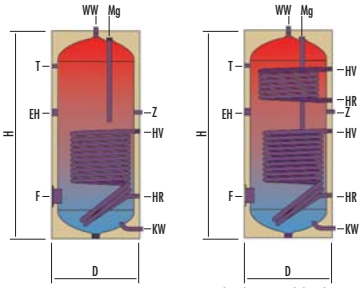

Solar design model with 2 bare-tube heat exchangers

GUNTAMATIC

heating with future

GUNTAMATIC Heating Technology GmbH
a company of the Georg Fischer Group

4722 Peuerbach, Austria, Bruck 7
Tel. +43-(0)7276/2441-0, Fax +43-(0)7276/3031
e-mail: info@guntamatic.com
www.guntamatic.com

03/2010 May be subject to technical changes and printing errors.